4332401000852

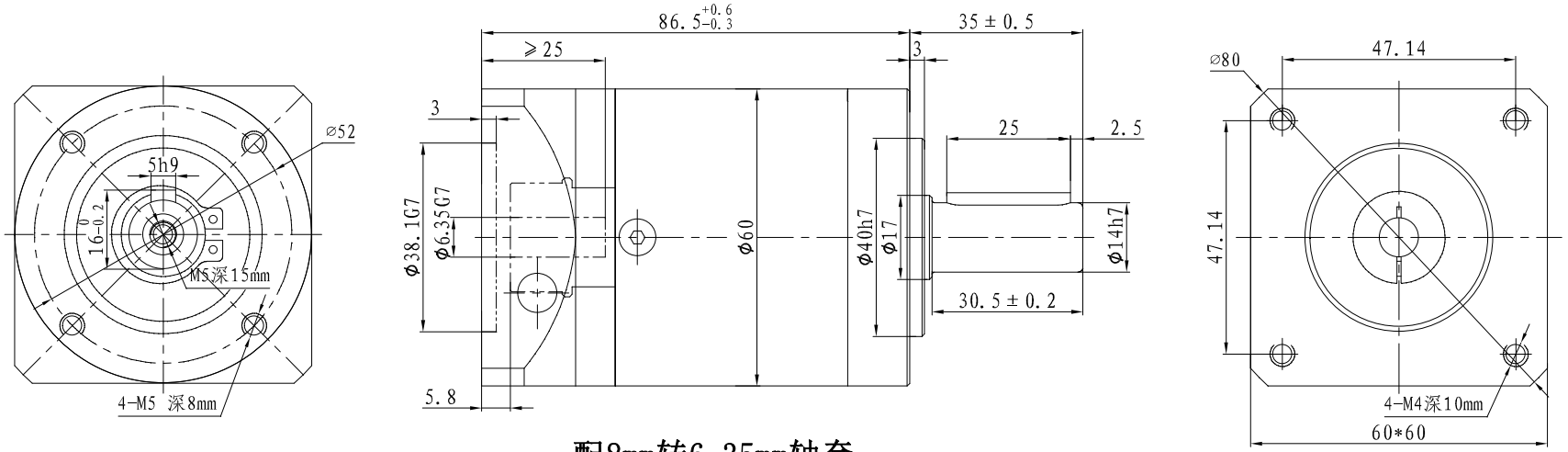

配8mm转6.35mm轴套

规格 Specifications

1. 减速比 Gear Ratio	40:1
2. 减速级数 Gear Stage	2
3. 回程间隙 Backlash	12arc-min
4. 转动惯量Kgcm² Monment of inertia	0.064
5. 额定扭矩 Rated output torque	40 NM
6. 瞬间承受最大扭矩Instant stop torque	2倍于额定输出力矩（two times of rated torque)
7. 传动效率 Full load effciency	94%
8. 寿命 Life	20000 hour
9. 重量 Weight	1.1 KG
10. 保护等级 IP	IP54
11. 适配电机 Adapted motor	NEMA23,24 stepper motor

REV.	版本记录 REVISION RECORD	DATE
	原始版本 Original revision	

Unit: mm
第一角画法
FIRST ANGLE METHOD
未注线性与角度尺寸公差
Tolerances for linear and angular dimensions without individual tolerance indications
GB/T 1804-m eqv ISO 2768-1:m
未注形状与位置尺寸公差
Geometrical tolerance for features without individual tolerance indications
GB/T 1184-K eqv ISO 2768-2:K
UNLESS OTHERWISE SPECIFIED

	NAMES	SIGNATURE	DATE
批准 Approve			
标准化 Standard			
工艺 Technology			
审核 Check			
设计 Design	段伟		2019.12.18

MOONS'
Shanghai Moons' Electric Co., Ltd.

GEARBOX 减速机

This ducument is released for information only. Its reproduction in whole or in part or its dissemination to third parties is prohibited. All trademarks and registered trademarks appearing on this document are the property of their respective owners.

60ZDE40-063814 | REV.A | SCALE 1:1 | Sheet 1 of 1